PITBUL-N-LED

IP65 ZONE 2/22

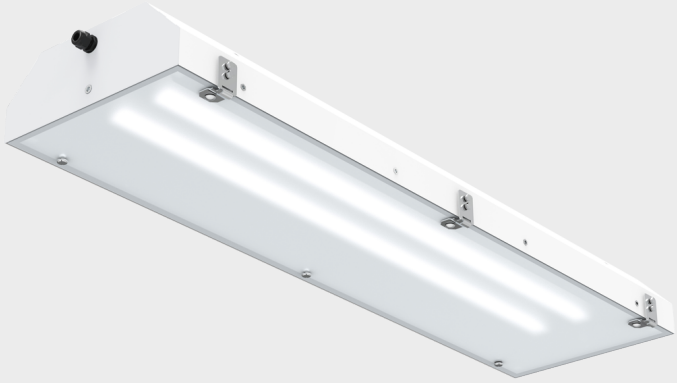

Description

Robust metal linear luminaire designed for hazardous areas for ATEX zone 2/22. Body made of powder coated steel sheet (RAL 9016) – alternatively stainless steel AISI304 or AISI316. Cover made of opal tempered safety glass guaranteeing excellent homogeneity of illumination and glare reduction. Equipped with high quality electronic components guaranteeing high efficiency up to 131 lm/W and a lifetime of 100,000 h. It is characterized by high resistance to splash water and dust IP65. Suitable for ambient temperatures from -40 °C to +65 °C. Silicone-free – certified according to VDMA 24364. Mounting with ceiling brackets, positionable brackets, built-in frames or pipe brackets allows for a wide variety of applications. Designed to be mounted, recessed or suspended.

Documents to download

LDT, IES ATEX 2.22 EAC DECLARATION OF CONFORMITY EU INSTALLATION INSTRUCTIONS

Specifications

Operating voltage:
220-240 V / 50-60 Hz AC, 220-240 V DC

Source:
LED, 4000K, CRI +80, MacAdam3

Housing:
Painted steel sheet RAL 9016

Cover:
Tempered opal safety glass

Fastening:
Using M8 screws through the subfloor, hanging eyes, ceiling frame, ceiling brackets or booms screwed to the sides of the body

Connection:
Screwless three-pole terminal block, max. wire cross-section 2.5 mm2

Standard equipment:
M20 gland for cable diameter 7-12 mm and plug

Calculated lifetime – LED modules:
L80B10 Ta 35 – 70 000 h
L70B10 Ta 35 – 100 000 h

PITBUL-N-LED, PITBUL-N-LED-Em, MULTIPITBUL-N-LED
(FTZU 17 ATEX 0129X)
Ex II 3G Ex nR IIC T6 Gc
Ex II 3D Ex tc IIIC T68°C Dc

On order

3000K/4000K/5000K/6500K – colour temperature
MULTI – permanent emergency lighting (1h, 3h)
EM – temporary emergency lighting (1h, 3h)
DIM – dimmable electronic ballast (DALI, DSI, 1-10V)
1/3F – single-phase or three-phase connection, max. conductor cross-section 2.5 mm2
RAL – other colours
GESIS – possibility to equip the luminaires with connectors
NEREZ – body made of stainless steel sheet AISI 304 or AISI 316 (for NEREZ version lower ambient temperature by approx. 5-10 °C)

Accessories

Hinge screw DIN 580 M8 – eye
Item number: **2038**

PITBUL/SALUKA boom for boom diameter 50 mm (1 piece) AISI 304
Item number: **3590**

PITBUL boom set (2 pcs)
Item number: **4317**

PITBUL 4x18W suspended ceiling frame set
Item number: **4319**

PITBUL 4x36W suspended ceiling frame set
Item number: **4321**

Set of stainless steel ceiling handles PITBUL (2 pcs) AISI 304
Item number: **4811**

PITBUL 4x58W suspended ceiling frame set
Item number: **4323**

PITBUL 18W suspended ceiling frame set
Item number: **4318**

PITBUL 36W suspended ceiling frame set
Item number: **4320**

PITBUL 58W suspended ceiling frame set
Item number: **4322**

© 2025 All rights reserved. VYRTYCH a.s. does not warrant the accuracy or completeness of the information provided herein and is not responsible for any events that may occur as a result of unqualified reliance on this information. The information contained herein does not constitute a commercial offer and does not form part of a quotation or contract, unless confirmed by VYRTYCH a.s..